COMET
MADE LOCALLY, TRUSTED GLOBALLY
MADE IN THE USA

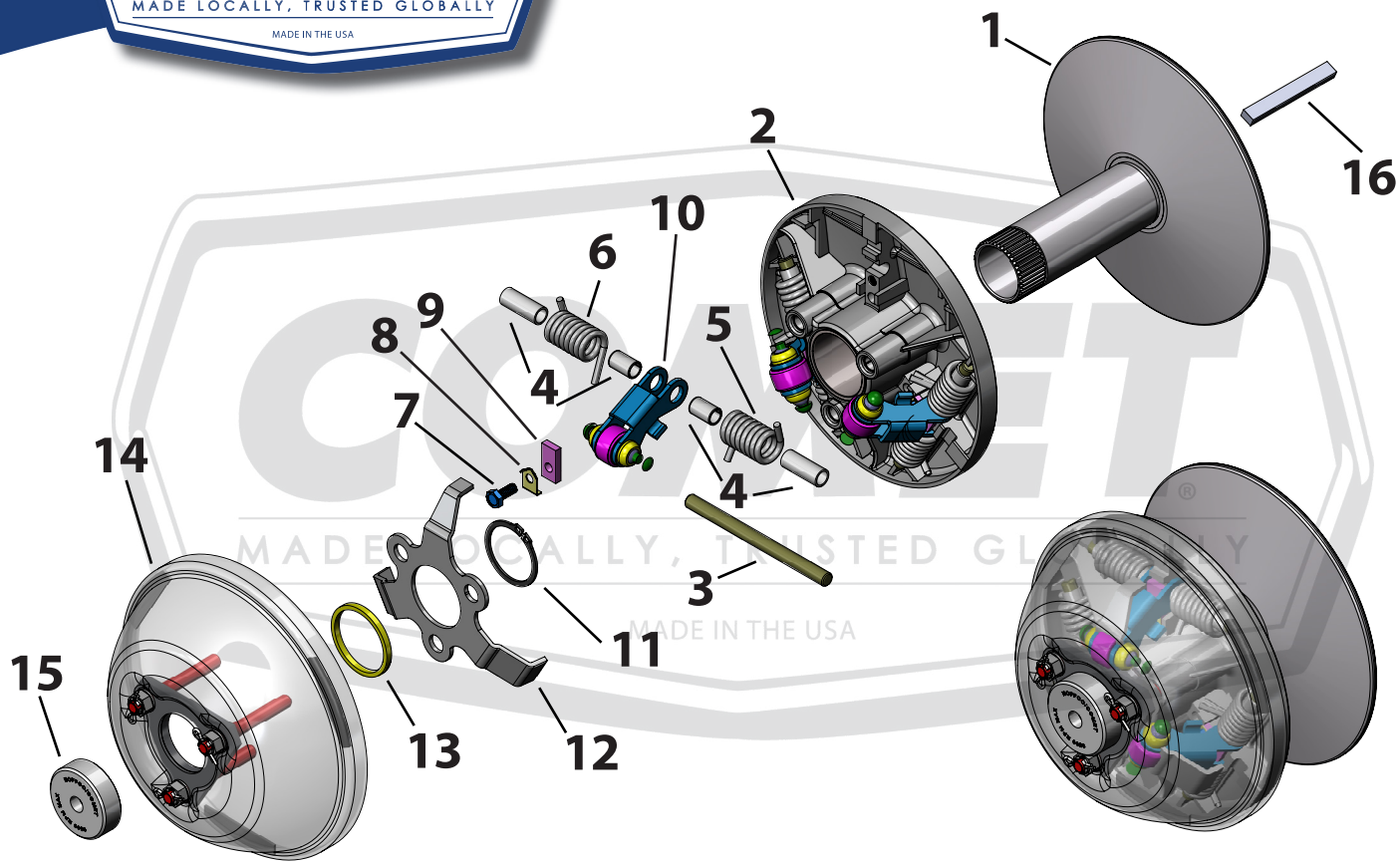

COMET/SALSBURY					
DRIVE CLUTCH MODEL	**PART NUMBER**	**PULLEY DIAMETER**	**BORE**	**TOP WIDTH, BELT**	**KEYWAY/TAPER**
1190	302701C	7.92"	1-1/8"	1-7/16"	1/4"
ITEM NO.	**ORDER NO.**	**DESCRIPTION**	**QTY REQ.**		
1	302677A	FIXED FACE & POST, ANODIZED	1		
2	302607A	MOVABLE FACE AND BEARING ASSEMBLY, ANODIZED	1		
3	SEE KIT	PIVOT PIN	3		
4	SEE KIT	PIVOT PIN BUSHINGS	12		
5	SEE KIT	RH SPRING	3		
6	SEE KIT	LH SPRING	3		
7	SEE KIT	SCREW	3		
8	SEE KIT	LOCK PLATE	3		
9	SEE KIT	CLAMP	3		
10	SEE KIT	ROLLER ARM	3		
11	300919A	RETAINING RING	1		
12	300917A	RETRACTOR	1		
13	300920A	SPACER	1		
14	300072A	RAMP PLATE ASSEMBLY	1		
15	300380A	RETAINING CUP	1		
16	211792A	KEY,1/4 x 1/4 x 3.25"	1		
REPAIR KITS					
DESCRIPTION	**PART NO.**	**DESCRIPTION**	**PART NO.**	**DESCRIPTION**	**PART NO.**
SPRING KIT	**309131A**	**ROLLER ARM KIT**	**302774A**	**PIVOT PIN KIT**	**309112A**
RH RED (3)		ROLLER 177g (3)		PIVOT PIN (3)	
LH BROWN (3)		LOCK PLATE (3)		BUSHING (12)	
LOCK PLATE (3)				SCREWS (3)	
				LOCK PLATE (3)	
				CLAMP (3)	

405 E. Fulton St. Edgerton, WI 53534 • 608-884-0770 • comet@certifiedpartscorp.com • cometclutches.com
Comet is a Division of the Certified Parts Corporation Family
©2017 Copyright, Certified Parts Corporation, All Rights Reserved